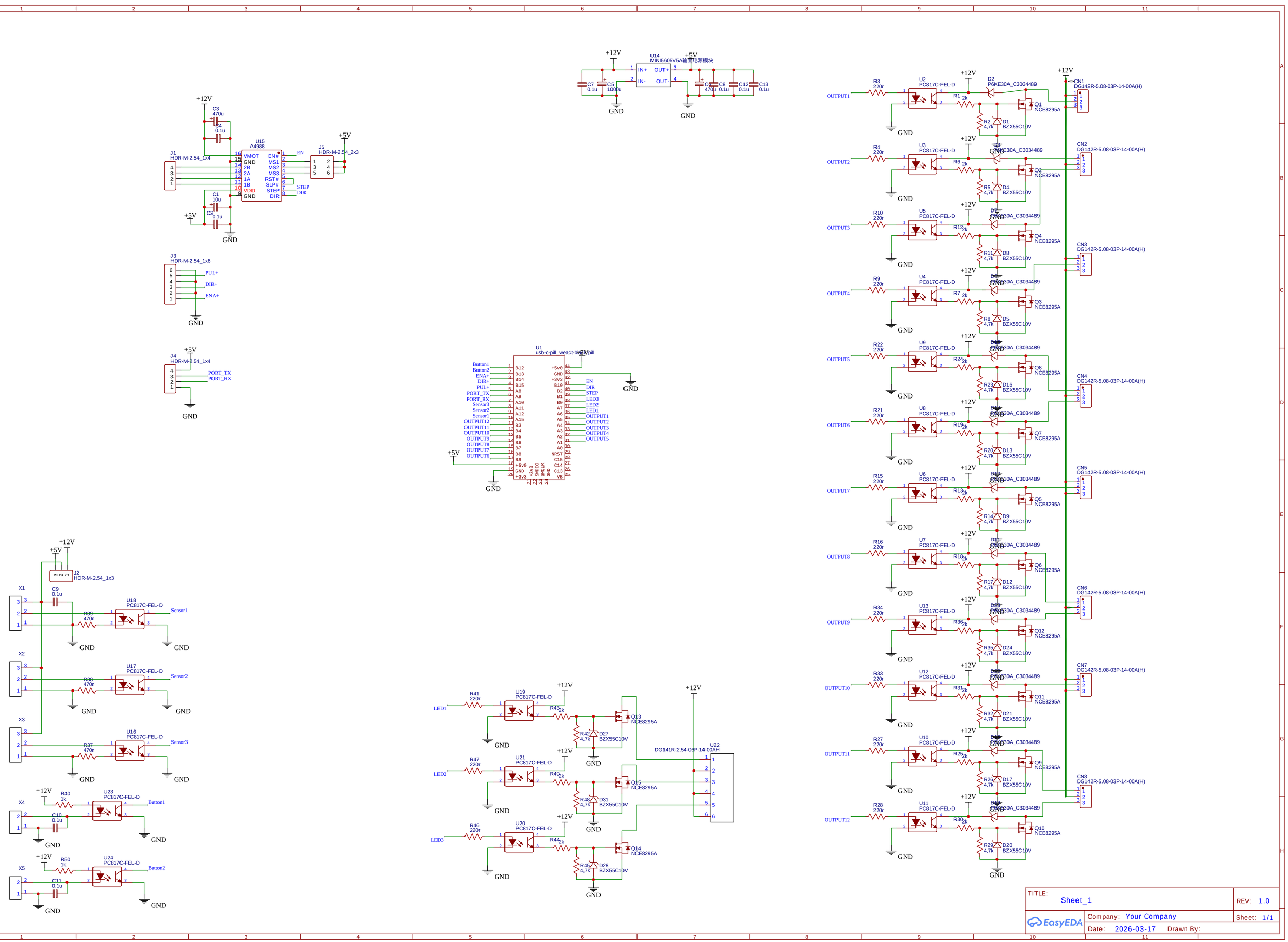
U14
MINI5605V5A输压电源模块
IN+
IN-
OUT+
OUT-
+12V
+5V
GND
C7 0.1u
C5 1000u
C6 470u
C8 0.1u
C12 0.1u
C13 0.1u
U15
A4988
VMOT
GND
2B
2A
1A
1B
VDD
GND
EN#
MS1
MS2
MS3
RST#
SLP#
STEP
DIR
J1
HDR-M-2.54_1x4
J5
HDR-M-2.54_2x3
C3 470u
C4 0.1u
C1 10u
C2 0.1u
J3
HDR-M-2.54_1x6
PUL+
DIR+
ENA+
J4
HDR-M-2.54_1x4
PORT_TX
PORT_RX
U1
usb-c-pill_weact-blackpill
Button1
Button2
ENA+
DIR+
PUL+
PORT_TX
PORT_RX
Sensor3
Sensor2
Sensor1
OUTPUT12
OUTPUT11
OUTPUT10
OUTPUT9
OUTPUT8
OUTPUT7
OUTPUT6
EN
DIR
STEP
LED3
LED2
LED1
OUTPUT1
OUTPUT2
OUTPUT3
OUTPUT4
OUTPUT5
J2
HDR-M-2.54_1x3
X1
X2
X3
X4
X5
C9 0.1u
C10 0.1u
C11 0.1u
R39 470r
R38 470r
R37 470r
R40 1k
R50 1k
U18 PC817C-FEL-D
U17 PC817C-FEL-D
U16 PC817C-FEL-D
U23 PC817C-FEL-D
U24 PC817C-FEL-D
Sensor1
Sensor2
Sensor3
Button1
Button2
R41 220r
R47 220r
R46 220r
U19 PC817C-FEL-D
U21 PC817C-FEL-D
U20 PC817C-FEL-D
R43 2k
R49 2k
R44 2k
R42 4,7k
R48 4,7k
R45 4,7k
D27 BZX55C10V
D31 BZX55C10V
D28 BZX55C10V
Q13 NCE8295A
Q15 NCE8295A
Q14 NCE8295A
U22
DG141R-2.54-06P-14-00AH
R3 220r
R4 220r
R10 220r
R9 220r
R22 220r
R21 220r
R15 220r
R16 220r
R34 220r
R33 220r
R27 220r
R28 220r
U2 PC817C-FEL-D
U3 PC817C-FEL-D
U5 PC817C-FEL-D
U4 PC817C-FEL-D
U9 PC817C-FEL-D
U8 PC817C-FEL-D
U6 PC817C-FEL-D
U7 PC817C-FEL-D
U13 PC817C-FEL-D
U12 PC817C-FEL-D
U10 PC817C-FEL-D
U11 PC817C-FEL-D
R1 2k
R6 2k
R12 2k
R7 2k
R24 2k
R19 2k
R13 2k
R18 2k
R36 2k
R31 2k
R25 2k
R30 2k
D2 P6KE30A_C3034489
D1 BZX55C10V
D4 BZX55C10V
D8 BZX55C10V
D5 BZX55C10V
D16 BZX55C10V
D13 BZX55C10V
D9 BZX55C10V
D12 BZX55C10V
D24 BZX55C10V
D21 BZX55C10V
D17 BZX55C10V
D20 BZX55C10V
Q1 NCE8295A
Q2 NCE8295A
Q4 NCE8295A
Q3 NCE8295A
Q8 NCE8295A
Q7 NCE8295A
Q5 NCE8295A
Q6 NCE8295A
Q12 NCE8295A
Q11 NCE8295A
Q9 NCE8295A
Q10 NCE8295A
CN1 DG142R-5.08-03P-14-00A(H)
CN2 DG142R-5.08-03P-14-00A(H)
CN3 DG142R-5.08-03P-14-00A(H)
CN4 DG142R-5.08-03P-14-00A(H)
CN5 DG142R-5.08-03P-14-00A(H)
CN6 DG142R-5.08-03P-14-00A(H)
CN7 DG142R-5.08-03P-14-00A(H)
CN8 DG142R-5.08-03P-14-00A(H)
TITLE:
Sheet_1
REV: 1.0
Company: Your Company
Sheet: 1/1
Date: 2026-03-17
Drawn By:
EasyEDA